TABLE 1					
SERVICE LINE SIZE	MINIMUM METER BOX SIZE	BOX MODEL	LID / FRAME MODEL	COMMENTS	INSULATION INSERTS
1 INCH	18" x 60"	330CS1860FSBS000390N	780113 / NA	NEW SERVICES	790153

NOTE 1: FOR LARGER SIZES , USE SINGLE SERVICE DETAIL AND CONFIGURATION

NOTE 2: THIS ALTERNATE DUAL METER BOX CONFIGURATION SHALL ONLY BE USED WHEN THE DUAL METER SINGLE BOX CONFIGURATION (SEE DWG WATER-6A) IS NOT COMMERCIALLY AVAILABLE AND WHEN APPROVED BY THE CITY ENGINEER.

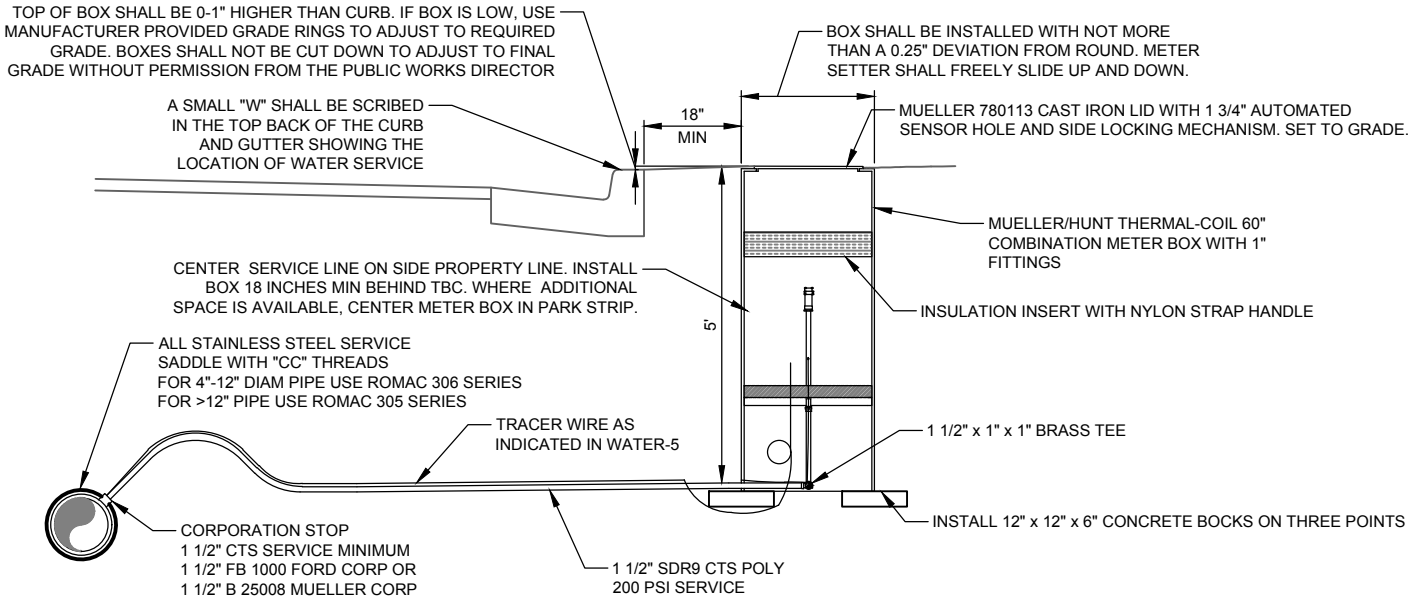

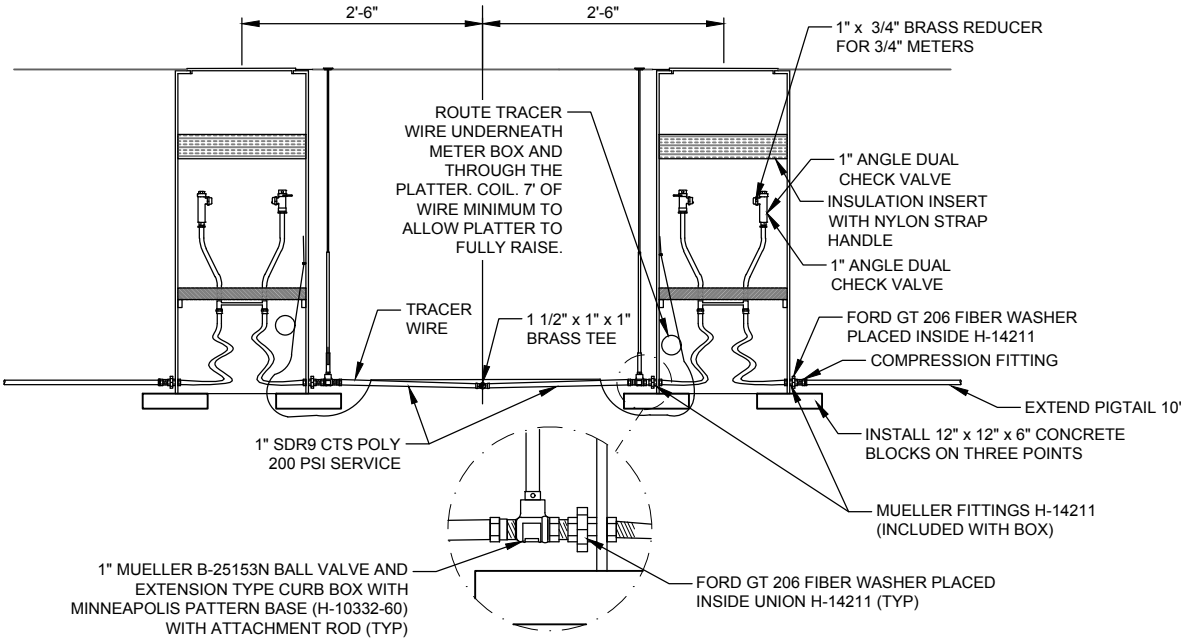

NOTES:

1. METER BOX, COVER, COPPER SETTER, CORPORATION STOP, & SERVICE LINES TO BE FURNISHED AND INSTALLED BY DEVELOPER AND CONFORM TO AWWA C800.
2. STAINLESS STEEL STIFFENERS ON ALL POLY CONNECTIONS.
3. METER BOXES ALLOWED WITHIN DRIVEWAY ZONE ONLY WITH PRIOR APPROVAL FROM PUBLIC WORKS DIRECTOR.
4. WATER METER WILL BE INSTALLED BY HEBER CITY.
5. SEE UTILS-3 FOR PLAN VIEW.
6. WATER METER CAN TO BE LOCATED IN THE MIDDLE OF THE PLANTER STRIP OR BETWEEN SIDEWALK AND PROPERTY LINE (FOR COMBINATION SIDEWALK) OR AS DIRECTED BY ENGINEER.
7. WATER SERVICE SHOULD CONNECT DIRECTLY TO THE MAIN LINE AND NOT "TEE" OFF FIRE HYDRANT LINE OR SERVICE LINES.
8. WATER METER CAN SHALL BE COMPLETELY BACKFILLED WITH COMPACTED 3" MINUS GRANULAR MATERIAL FROM TOP TO BOTTOM.
9. UNDER NO CIRCUMSTANCES SHALL THREAD SEALANT PASTE INCLUDING PIPE JOINT COMPOUND, PIPE DOPE, TEFLON PASTE, ETC. BE USED ON CITY INFRASTRUCTURE.
10. METER FEE WILL BE ASSESSED WITH BUILDING PERMIT OR AT TIME OF METER INSTALLATION.

WATER SERVICE - TWO LOTS

HORROCKS ENGINEERS
728 WEST 100 SOUTH #2
HEBER CITY, UTAH 84032
(435) 654-2226

DATE: FEBRUARY 2019
SCALE: N.T.S.

75 NORTH MAIN STREET
HEBER CITY, UTAH 84032
(435) 654-0757

HEBER CITY
HEART OF THE WASATCH BACK

HEBER CITY STANDARD DRAWING

WATER-6A - ALTERNATE

V:\ENGR\Stds\StdSpec\StdSpec 2019\Dwg Files\WATER-6A - ALT.dwg - Service 2 Lots - 2/06/2019 12:40pm, rfunk